Electrolux PROFESSIONAL

# Premium Preparation 1800 mm Cupboard Sink for Dishwasher with 2 Bowls & Right Drainer

ITEM #

MODEL #

NAME #

SIS #

AIA #

| | |
|---|---|
| **132931 (MLA2DTN)** | Cupboard Sink for Dishwasher with storage and 2 bowls 500x500x290 mm and right hand drainer for Undercounter Dishwashers, 1800mm |

## Short Form Specification

**Item No.**

Made entirely from stainless steel. Inner welded frame in stainless steel. Unique connection of panels to inner frame. The 50mm high worktop in 304 AISI stainless steel, 1mm in thickness, incorporates a layer of sound deadening material and has upturned edges. Upstand (h=100mm) with 8mm rounded edge. Drainage area suitable for drying operations. Additional space under drainer for undercounter dishwasher. Sound-deadened sliding doors. Base panel in 304 AISI stainless steel and height-adjustable intermediate shelf. Sink bowls in 304 AISI stainless steel with overflow pipe and drain hole. Mounted on feet, adjustable in height.

**APPROVAL:**

## Main Features

- Sturdiness, stability and reliability of table accurately tested.

## Construction

- Constructed entirely in stainless steel to offer maximum durability.
- 50 mm worktop in 304 AISI stainless steel with upturned edges, incorporates an 18 mm layer of sound deadening material.
- Reinforced side and base panel in 304 AISI stainless steel.
- 304 AISI stainless steel feet, 200 mm high and 54 mm in diameter, adjustable by -50/+30 mm.
- Bottom part of drain left free to house an undercounter dishwasher.
- Wide range of taps are available to suit every need.
- Inner welded frame in stainless steel to guarantee superior strength and stability.
- Sturdy sound-deadened sliding doors on tracks located flush to the front of the frame.
- Easy access to the cupboard interior on all lengths guaranteed by the use of only 2 doors.
- Drainage area suitable for drying operations
- 100 mm upstand with 10 mm radioused corner and 13 mm deep, designed to be used against a wall.

## Optional Accessories

- Wheel kit for cupboards, 4 wheels (2 with brakes), D=1000 mm — PNC 855299 ❑
- Elbow operated mixer tap with spout 3/4", single hole — PNC 855322 ❑
- Elbow operated mixer tap with short spout 3/4", single hole — PNC 855323 ❑
- Foot operated mixer tap (hot and cold) with spout 3/4" — PNC 855328 ❑
- Single plastic drain syphon 2 " for Sinks — PNC 895313 ❑

# Premium Preparation
# 1800 mm Cupboard Sink for Dishwasher with 2 Bowls & Right Drainer

Front

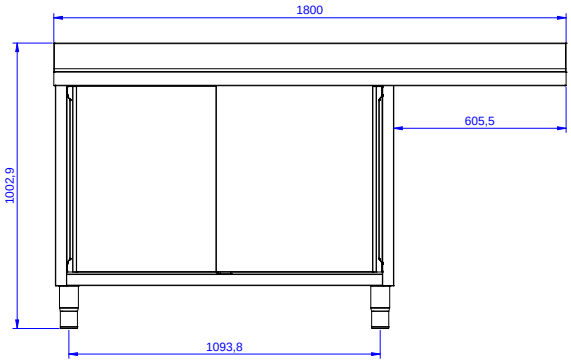


Side

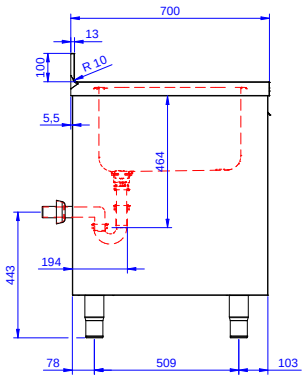


D = Drain

Top

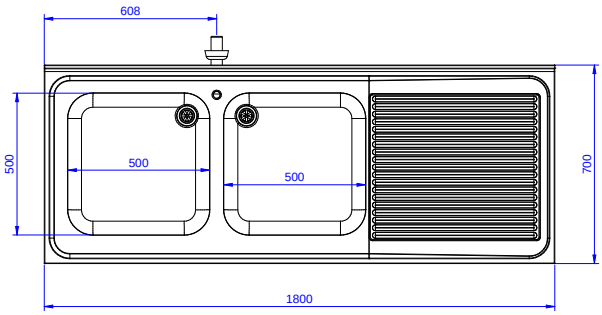


## Drain:

| | |
|---|---|
| **Drainer position:** | |
| **132931 (MLA2DTN)** | Right to left |

## Key Information:

| | |
|---|---|
| **Cabinet width:** | 1745 mm |
| **Cabinet depth:** | 645 mm |
| **Cabinet height:** | 385 mm |
| **External dimensions, Width:** | 1800 mm |
| **External dimensions, Depth:** | 700 mm |
| **External dimensions, Height:** | 1000 mm |
| **Upstand Dimensions, Height:** | 100 mm |
| **Upstand Dimensions, Depth:** | 13 mm |
| **Upstand Dimensions, Radius:** | R=10 |
| **Bowls number** | 2 |
| **Bowl dimensions** | 500x500xH300 |
| **Number and type of doors:** | 2 Sliding |
| **Worktop thickness:** | 50 mm |
| **Net weight:** | 60 kg |



The company reserves the right to make modifications to the products without prior notice. All information correct at time of printing.